REV.	DESCRIPTION	ECN NO.	NAME	DATE
0	FIRST EDITION	N/A	JASON	2020-05-13

ALL PARTS MUST MEET TO RoHS REQUIREMENTS

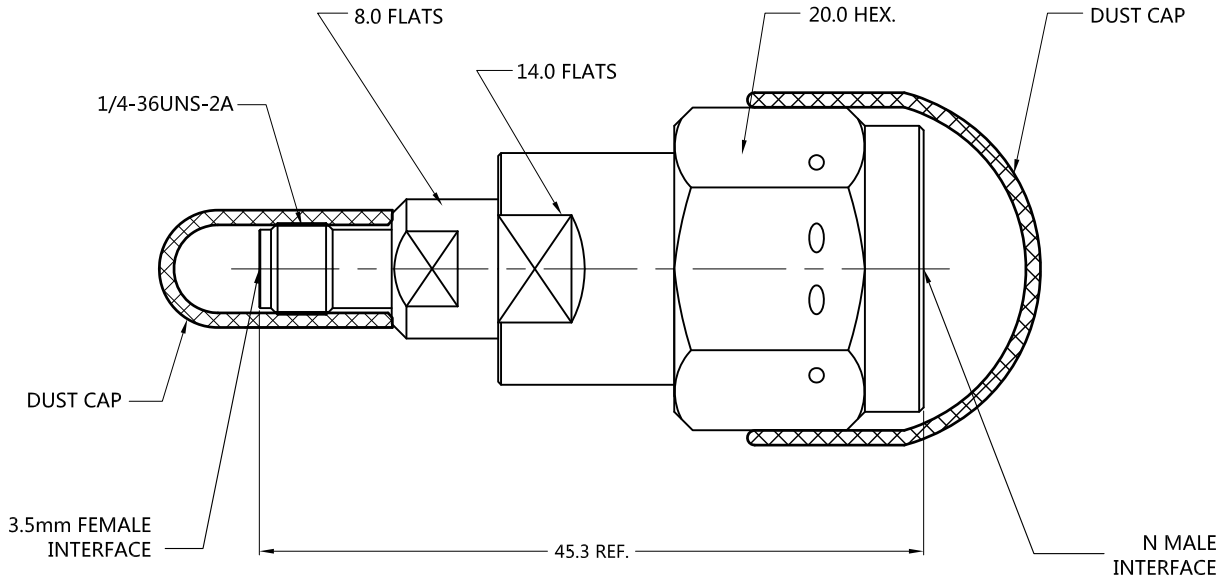

MATERIALS AND PLATING UNIT: MICRO-INCHES

PART NAME	MATERIALS	PLATING
BODY/SHELL	STAINLESS STEEL	PASSIVATION
CONTACT PIN	Be-Cu C17300	GOLD /COPPER
INSULATOR	PEI	N/A
DUST CAP	PVC	N/A

ELECTRICAL CHARACTERISTICS

IMPEDANCE		50 Ω
VOLTAGE RATING		335 V(rms)
FREQUENCY RANGE		DC ~ 18 GHz
DIELECTRIC WITHSTANDING VOLTAGE		>1000 V
CONTACT RESISTANCE (3.5mm)	CENTER CONTACT	< 0.75 mΩ
	OUTER CONTACT	< 0.13 mΩ
CONTACT RESISTANCE (N)	CENTER CONTACT	< 1.0 mΩ
	OUTER CONTACT	< 0.2 mΩ
INSULATION RESISTANCE		>5000 MΩ
INSERTION LOSS		According to the cable
VSWR		< 1.20
3RD INTERMODULATION		N/A

MECHANICAL CHARACTERISTICS

FORCE TO ENGAGE AND DISENGAGE	N/A
CENTER CONTACT RETENTION FORCE	> 6 lbs
RECOMMENDED COUPLING TORQUE	7-10 in.lbs (N)
COUPLING NUT RETENTION FORCE	> 60 lbs
DURABILITY	> 500 cycles

ENVIRONMENTAL PARAMETER

TEMPERATURE RANGE	-40 °C ~ +85 °C

* CUSTOMER OUTLINE DRAWING

UNLESS OTHERWISE SPECIFIED:
1) EDGES : C0.15 MAX ;
2) REMOVE ALL BURRS ;
3) SURFACE ROUGHNESS : Ra1.6 ;
4) UNITS : mm ;
5) DIMENSIONS TOLERANCES
DECIMALS : .x ±0.3 .xx ±0.2 .xxx±0.1 ;
ANGLES : ± 5°.

THIRD ANGLE PROJECTION

APPROVED :	CUSTOMER P/N : -
CHECKED :	SCALE : 1 : 1
DRAWING : JASON	DATE : 2020-05-13
	PAGE : 1/1

SLK SUPERLINK

TITLE : 3.5mm FEMALE TO N MALE ADAPTER

DRAWING NO. : T-5NCM06S-P3F

COMPANY WEBSITE : www.slkcorp.com