REV.	DESCRIPTION	ECN NO.	NAME	DATE
0	FIRST EDITION	N/A	Kevin.Li	2020-08-25

ALL PARTS MUST MEET TO RoHS REQUIREMENTS

1.CRIMPED FERRULE HEX. CRIMP SIZE .276"
2.CONTACT PIN SOLIDER

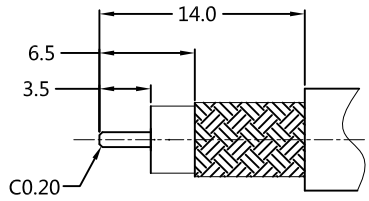

RECOMMENDED CABLE STRIPPING DIM'S

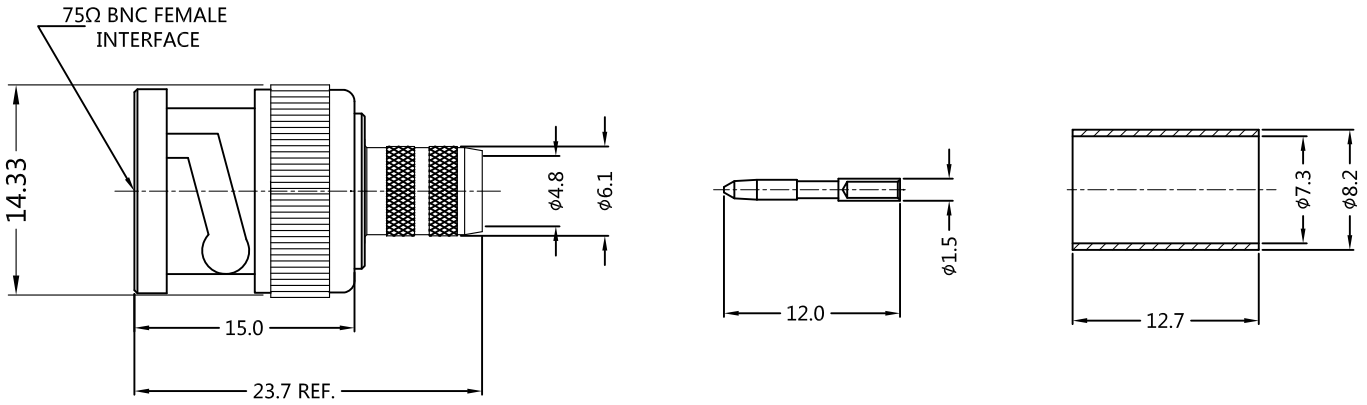

MATERIALS AND PLATING UNIT: MICRO-INCHES

PART NAME	MATERIALS	PLATING
BODY	BRASS	NICKEL PLATING
INSULATOR	PTFE ASTM-D-1710	N/A
CONTACT PIN	BRASS	GOLD PLATING
FERRULE	BRASS	NICKEL PLATING

ELECTRICAL CHARACTERISTICS

IMPEDANCE		75 Ω
VOLTAGE RATING		500 V(rms)
FREQUENCY RANGE		0 ~ 12 GHz
DIELECTRIC WITHSTANDING VOLTAGE		>1500 V
CONTACT RESISTANCE	CENTER CONTACT	<1.5 mΩ
	OUTER CONTACT	<1.0 mΩ
INSULATION RESISTANCE		>5000 MΩ
INSERTION LOSS		N/A
VSWR		< 1.3
3RD INTERMODULATION		N/A

MECHANICAL CHARACTERISTICS

FORCE TO ENGAGE AND DISENGAGE	N/A
CENTER CONTACT RETENTION FORCE	N/A
RECOMMENDED COUPLING TORQUE	N/A
COUPLING NUT RETENTION FORCE	> 100 lbs
DURABILITY	> 500 cycles

ENVIRONMENTAL PARAMETER

TEMPERATURE RANGE	-40℃~+85℃
THERMAL SHOCK	US MIL- STD 202, Meth. 107,Cond. B
VIBRATION	US MIL- STD 202, Meth. 204,Cond. B
SHOCK	US MIL- STD 202, Meth. 213,Cond. G

* CUSTOMER OUTLINE DRAWING

UNLESS OTHERWISE SPECIFIED:
1) EDGES : C0.15 MAX ;
2) REMOVE ALL BURRS ;
3) SURFACE ROUGHNESS : Ra1.6 ;
4) UNITS : mm ;
5) DIMENSIONS TOLERANCES
DECIMALS : .x ±0.3 .xx ±0.2 .xxx±0.1;
ANGLES : ± 5°.

THIRD ANGLE PROJECTION

APPROVED :	CUSTOMER P/N : -
CHECKED :	SCALE : -
DRAWING :	DATE : 2020-08-25
	PAGE : 1/1

SLK SUPERLINK

TITLE : 75ohm BNC MALE S/T FOR 1694A(BELDEN) CABLE

DRAWING NO. : 7BNM11S-A519-004

COMPANY WEBSITE : www.slkcorp.com

CUSTOMER OUTLINE DRAWING