REV.	DESCRIPTION	ECN NO.	NAME	DATE
0	FIRST EDITION	N/A	HRWEI	2021-04-02

ALL PARTS MUST MEET TO RoHS REQUIREMENTS

REMARKS:
1.CRIMPED FERRULE HEX. CRIMP SIZE .429"
2.CONTACT PIN TO SOLDER

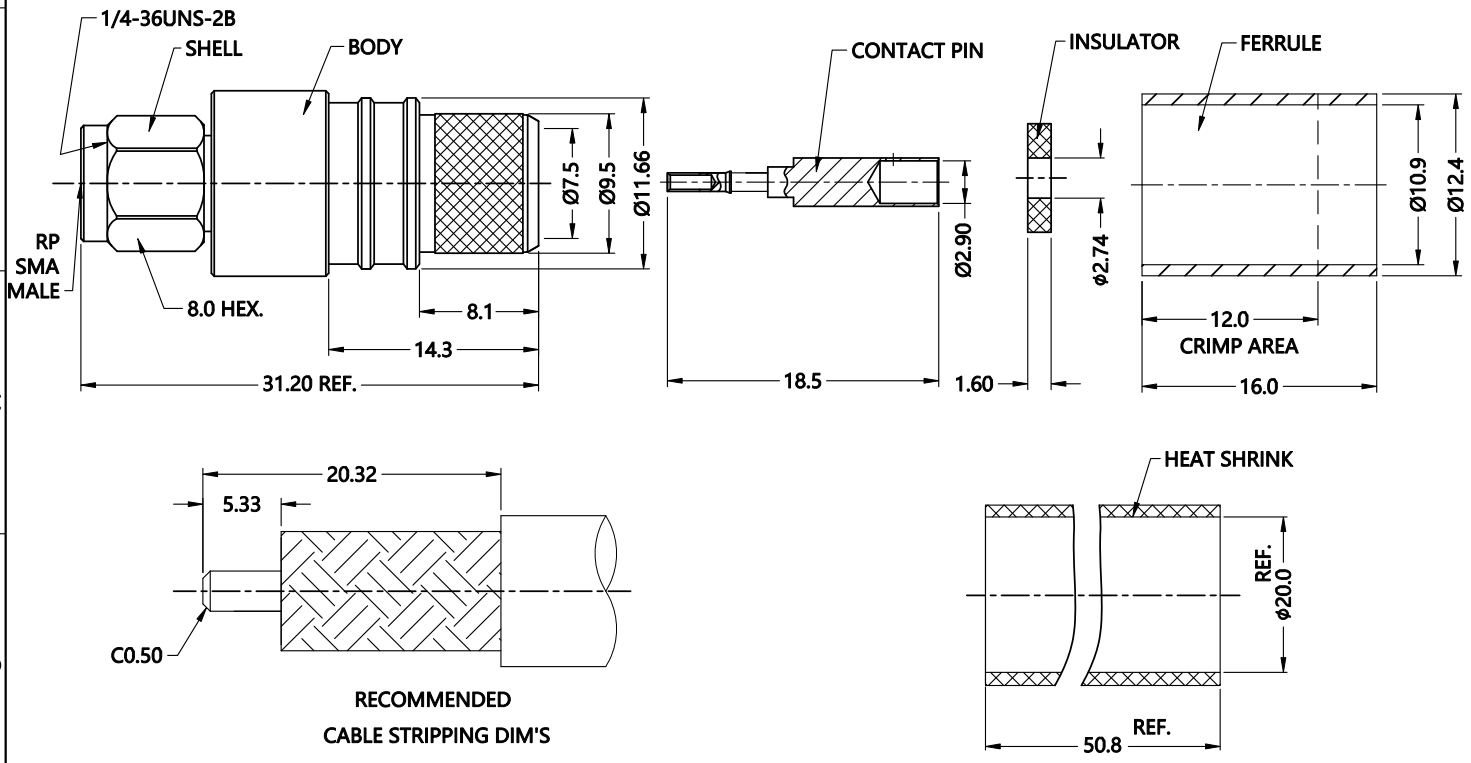

MATERIALS AND PLATING UNIT: MICRO-INCHES

PART NAME	MATERIALS	PLATING
BODY	BRASS C3604	NICKEL 200 u"/COPPER
INSULATOR	PTFE ASTM-D-1710	N/A
CONTACT PIN	Be+Cu 17300	GOLD 5 u" / NICKEL/COPPER
SHELL	BRASS C3604	NICKEL 200 u"/COPPER

ELECTRICAL CHARACTERISTICS

IMPEDANCE		50 Ω
VOLTAGE RATING		335 V(rms)
FREQUENCY RANGE		DC ~ 6 GHz
DIELECTRIC WITHSTANDING VOLTAGE		>750 V
CONTACT RESISTANCE	CENTER CONTACT	<3.0 mΩ
	OUTER CONTACT	<2.0 mΩ
INSULATION RESISTANCE		>5000 MΩ
INSERTION LOSS		N/A
RF-LEAKAGE		N/A
VSWR		<1.30
3RD INTERMODULATION		N/A

MECHANICAL CHARACTERISTICS

FORCE TO ENGAGE AND DISENGAGE	N/A
CENTER CONTACT RETENTION FORCE	N/A
RECOMMENDED COUPLING TORQUE	7-10 in-lbs
COUPLING NUT RETENTION FORCE	>60 lbs
DURABILITY	>500 cycles

ENVIRONMENTAL PARAMETER

TEMPERATURE RANGE	-40 ℃~+125 ℃
RELATIVE HUMIDITY	MIL- STD 202, Meth. 106
VIBRATION	MIL- STD 202, Meth. 204,Cond. D
SHOCK	MIL- STD 202, Meth. 213,Cond. I

* CUSTOMER OUTLINE DRAWING

UNLESS OTHERWISE SPECIFIED:
1) EDGES : C0.15 MAX ;
2) REMOVE ALL BURRS ;
3) SURFACE ROUGHNESS : Ra1.6 ;
4) UNITS : mm ;
5) DIMENSIONS TOLERANCES
DECIMALS : .x ±0.3 .xx ±0.2 .xxx±0.1;
ANGLES : ± 5°.

THIRD ANGLE PROJECTION

APPROVED :	CUSTOMER P/N : -
CHECKED :	SCALE : 2: 1
DRAWING :	DATE : 2021-04-02
	PAGE : 1/1

SLK SUPERLINK

TITLE : RP-SMA MALE S/T CRIMP FOR LMR-400 CABLE,50Ω

DRAWING NO. : 5RMAM11S-A11-003

COMPANY WEBSITE : www.slkcorp.com

CUSTOMER OUTLINE DRAWING