REV.	DESCRIPTION	ECN NO.	NAME	DATE
0	FIRST EDITION	N/A	Liu	2019-06-03
1	MODIFICATUON PLATING	N/A	Liu	2019-06-21
2	UPDATE DRAWING	N/A	JASON	2020-04-22

RoHS

ALL PARTS MUST MEET TO RoHS REQUIREMENTS

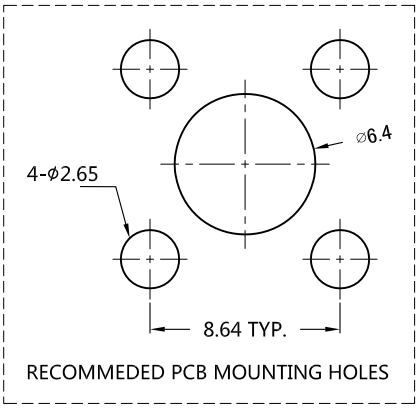

RECOMMEDED PCB MOUNTING HOLES

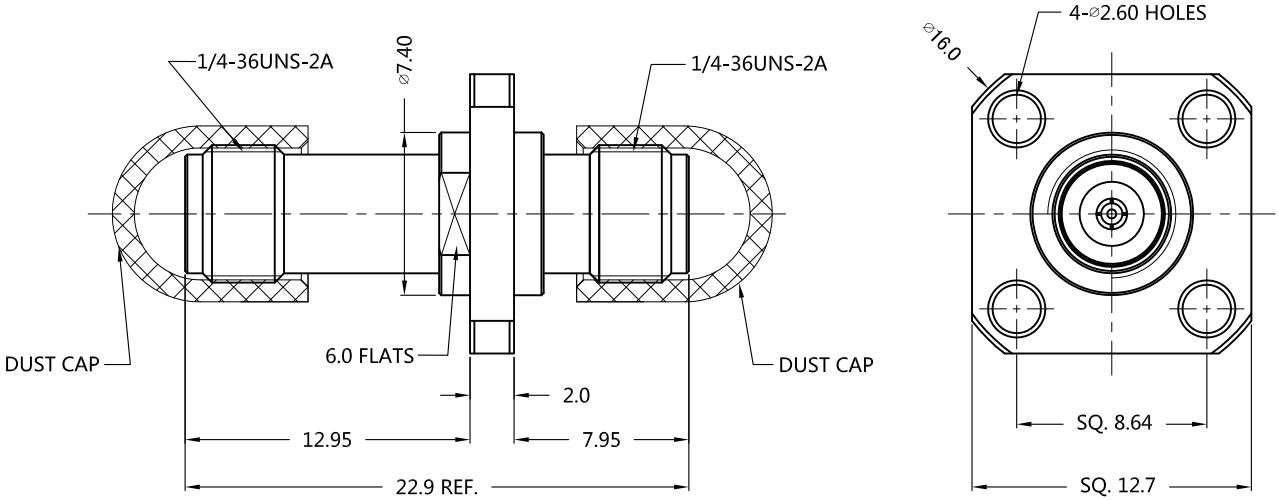

MATERIALS AND PLATING UNIT: MICRO-INCHES		
PART NAME	MATERIALS	PLATING
BODY	STAINLESS STEEL	PASSIVATION
CONTACT PIN	Be-Cu C17300	GOLD 50u"/COPPER
INSULATOR	PEI	N/A
DUST CAP	PVC	N/A

ELECTRICAL CHARACTERISTICS		
IMPEDANCE		50 Ω
VOLTAGE RATING		N/A
FREQUENCY RANGE		0 ~ 40 GHz
DIELECTRIC WITHSTANDING VOLTAGE		>1000 V
CONTACT RESISTANCE	CENTER CONTACT	<3.0 mΩ
	OUTER CONTACT	<2.0 mΩ
INSULATION RESISTANCE		>1000 MΩ
INSERTION LOSS		$< 0.08x\sqrt{F(GHz)}$ dB
VSWR		<1.25
3RD INTERMODULATION		N/A

MECHANICAL CHARACTERISTICS	
FORCE TO ENGAGE AND DISENGAGE	N/A
CENTER CONTACT RETENTION FORCE	> 6 lbs
RECOMMENDED COUPLING TORQUE	N/A
COUPLING NUT RETENTION FORCE	N/A
DURABILITY	> 500 cycles

ENVIRONMENTAL PARAMETER	
TEMPERATURE RANGE	-65 ℃ ~ +165 ℃

* CUSTOMER OUTLINE DRAWING

UNLESS OTHERWISE SPECIFIED:
1) EDGES : C0.15 MAX ;
2) REMOVE ALL BURRS ;
3) SURFACE ROUGHNESS : Ra1.6 ;
4) UNITS : mm ;
5) DIMENSIONS TOLERANCES
DECIMALS : .x ±0.3 .xx ±0.2 .xxx±0.1 ;
ANGLES : ± 5°.

THIRD ANGLE PROJECTION

APPROVED :	CUSTOMER P/N : -
CHECKED :	SCALE : 1 : 1
DRAWING : JASON	DATE : 2020-04-22
	PAGE : 1/1

SLK SUPERLINK

TITLE : 2.92mm FEMALE TO 2.92mm FEMALE ADAPTER WITH 4-HOLES FLANGE

DRAWING NO. : 5P9F86S-P9F-002

COMPANY WEBSITE : www.slkcorp.com