REV.	DESCRIPTION	ECN NO.	NAME	DATE
0	FIRST EDITION	N/A	LU	2013-0-28
1	NEW FRAME	N/A	HRWEI	2020-10-12
2	UPDATE THE DRAWING	N/A	HRWEI	2020-10-15

RoHS

ALL PARTS MUST MEET TO RoHS REQUIREMENTS

1. CONTACT PIN TO SOLDER
2. ADDS SIZE : 7.5 mm

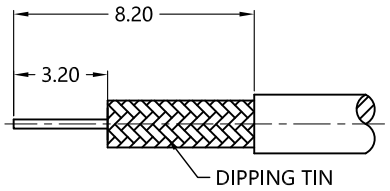

RECOMMENDED
CABLE STRIPPING DIM'S

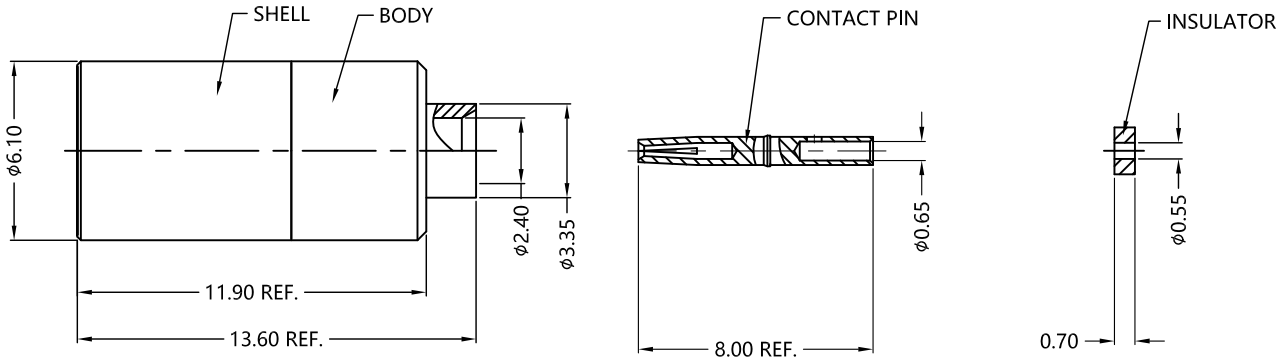

MATERIALS AND PLATING UNIT: MICRO-INCHES

PART NAME	MATERIALS	PLATING
BODY	BRASS C3604	GOLD 3 u"/NICKEL/COPPER
INSULATOR	PTFE MIL-P-19468	N/A
CONTACT PIN	PHOPSHOR BRONZE	GOLD 10 u"/NICKEL/COPPER
SHELL	BRASS C3602	GOLD 3 u"/NICKEL/COPPER

ELECTRICAL CHARACTERISTICS

IMPEDANCE		50 Ω
VOLTAGE RATING		335V(rms)
FREQUENCY RANGE		DC ~ 4.5 GHz
DIELECTRIC WITHSTANDING VOLTAGE		>500 V
CONTACT RESISTANCE	CENTER CONTACT	<5.0 mΩ
	OUTER CONTACT	<2.5 mΩ
INSULATION RESISTANCE		>1000 MΩ
INSERTION LOSS		N/A
VSWR		N/A
3RD INTERMODULATION		N/A

MECHANICAL CHARACTERISTICS

FORCE TO ENGAGE AND DISENGAGE	N/A
CENTER CONTACT RETENTION FORCE	N/A
RECOMMENDED COUPLING TORQUE	N/A
COUPLING NUT RETENTION FORCE	N/A
DURABILITY	> 500 cycles

ENVIRONMENTAL PARAMETER

TEMPERATURE RANGE	-55 ℃~+155 ℃

* CUSTOMER OUTLINE DRAWING

UNLESS OTHERWISE SPECIFIED:
1) EDGES : C0.15 MAX ;
2) REMOVE ALL BURRS ;
3) SURFACE ROUGHNESS : Ra1.6 ;
4) UNITS : mm ;
5) DIMENSIONS TOLERANCES
DECIMALS : .x ±0.3 .xx ±0.2 .xxx±0.1;
ANGLES : ± 5°.

THIRD ANGLE PROJECTION

APPROVED :	CUSTOMER P/N : -
CHECKED :	SCALE : 4: 1
DRAWING :	DATE : 2020-10-15
	PAGE : 1/1

SLK SUPERLINK

TITLE : SMB MALE S/T CRIMP FOR MAXFLEX 086 CABLE,50 Ω

DRAWING NO. : 5MBM15S-S01-001

COMPANY WEBSITE : www.slkcorp.com