REV.	DESCRIPTION	ECN NO.	NAME	DATE
0	FIRST EDITION	N/A	JASON	2020-10-19

RoHS

ALL PARTS MUST MEET TO RoHS REQUIREMENTS

REMARKS:
1.CRIMP FERRULE FOR .150" HEX.
2.CONTACT PIN TO SOLDER OR CRIMP

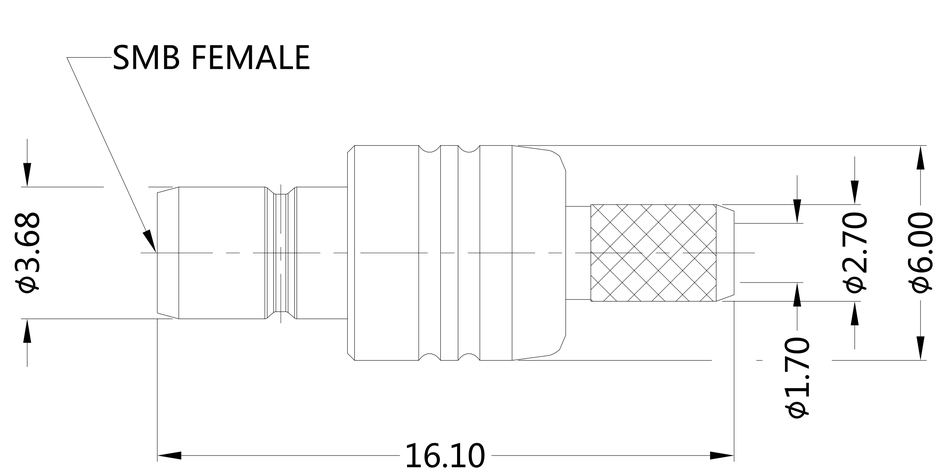

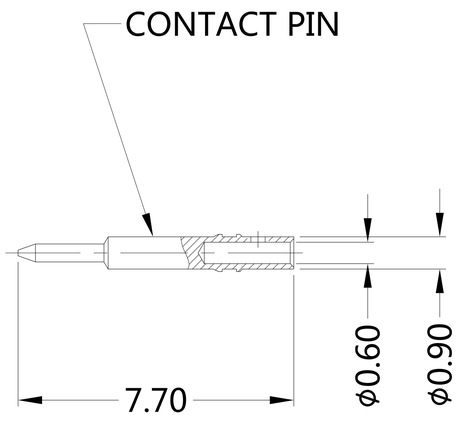

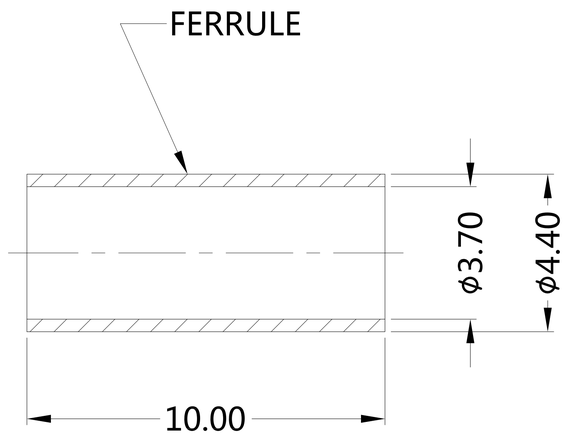

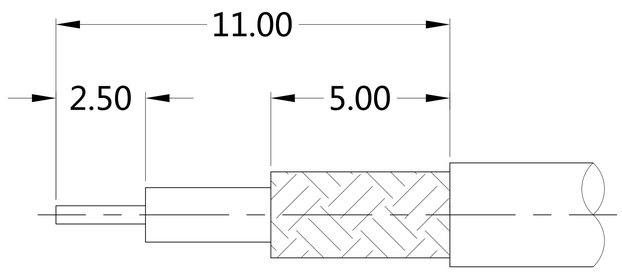

RECOMMENDED CABLE STRIPPING DIM'S

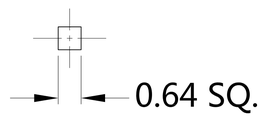

RECOMMENDED CENTER CONTACT CRIMP SQ. (ALTERNATIVE)

MATERIALS AND PLATING UNIT: MICRO-INCHES		
PART NAME	MATERIALS	PLATING
BODY	BRASS C3602	GOLD 3 u"/NICKEL/COPPER
CONTACT PIN	BRASS C3604	GOLD 5 u"/NICKEL/COPPER
INSULATOR	PTFE ASTM-D-1710	N/A
BARREL	BRASS C3604	GOLD 3 u"/NICKEL/COPPER
FERRULE	BRASS C3602	GOLD 3 u"/NICKEL/COPPER

ELECTRICAL CHARACTERISTICS		
IMPEDANCE		50 Ω
VOLTAGE RATING		250 V(rms)
FREQUENCY RANGE		DC ~ 6 GHz
DIELECTRIC WITHSTANDING VOLTAGE		>750 V
CONTACT RESISTANCE	CENTER CONTACT	<6.0 mΩ
	OUTER CONTACT	<1.0 mΩ
INSULATION RESISTANCE		>1000 MΩ
INSERTION LOSS		ACCORDING TO THE CABLE
VSWR		<1.40

MECHANICAL CHARACTERISTICS	
FORCE TO ENGAGE AND DISENGAGE	N/A
CENTER CONTACT RETENTION FORCE	> 4 lbs
RECOMMENDED COUPLING TORQUE	N/A
COUPLING NUT RETENTION FORCE	N/A
DURABILITY	> 500 cycles

ENVIRONMENTAL PARAMETER	
TEMPERATURE RANGE	-65 ℃ ~ +165 ℃
THERMAL SHOCK	US MIL- STD 202, Meth. 107,Cond. B
VIBRATION	US MIL- STD 202, Meth. 204,Cond. B
SHOCK	US MIL- STD 202, Meth. 213,Cond. B

CUSTOMER OUTLINE DRAWING

* CUSTOMER OUTLINE DRAWING

UNLESS OTHERWISE SPECIFIED:
1) EDGES : C0.15 MAX ;
2) REMOVE ALL BURRS ;
3) SURFACE ROUGHNESS : Ra1.6 ;
4) UNITS : mm ;
5) DIMENSIONS TOLERANCES
DECIMALS : .x ±0.3 .xx ±0.2 .xxx±0.1 ;
ANGLES : ± 5°.

THIRD ANGLE PROJECTION

APPROVED :	CUSTOMER P/N : -
CHECKED :	SCALE : 1 : 1
DRAWING : JASON	DATE : 2020-10-19
	PAGE : 1/1

SLK SUPERLINK

TITLE : SMB FEMALE S/T CRIMP FOR RG316D CABLE, 50Ω

DRAWING NO. : 5MBF11S-A50-004

COMPANY WEBSITE : www.slkcorp.com