REV.	DESCRIPTION	ECN NO.	NAME	DATE
0	FIRST EDTION	N/A	WYJ	2017-11-10
1	UPDATE THE DRAWING FRAME	N/A	PY	2020-06-20

RoHS

ALL PARTS MUST MEET TO RoHS REQUIREMENTS

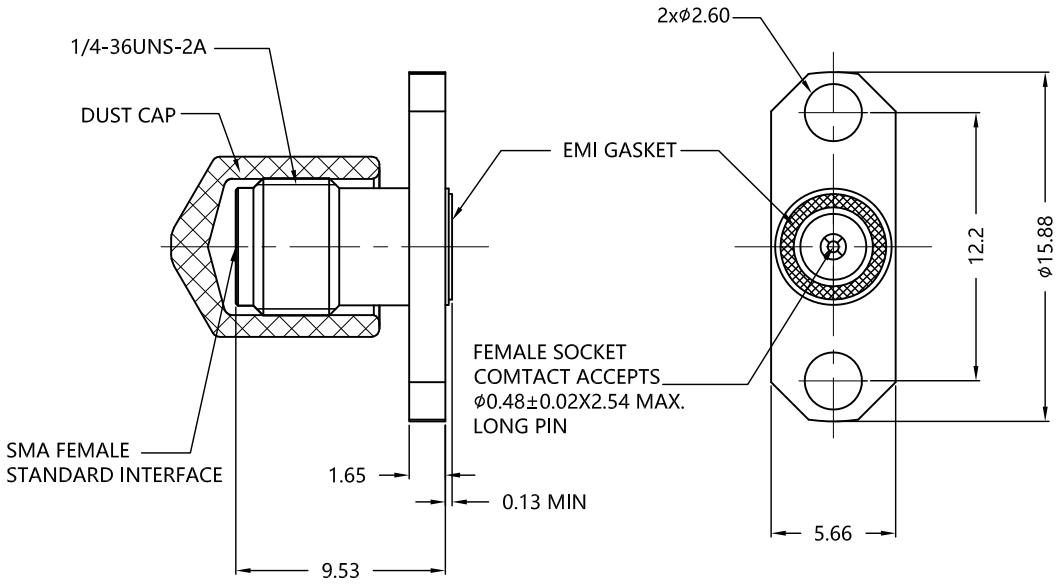

MATERIALS AND PLATING UNIT: MICRO-INCHES

PART NAME	MATERIALS	PLATING
BODY	STAINLESS STEEL	PASSIVATION
INSULATOR	PTFE ASTM-D-1710	N/A
CONTACT PIN	BERYLLIUM COPPER	GOLD 100μ " / NICKEL/COPPER
EMI WASHER	RUBBER	SILVER PL./ALUMINUM
DUST CAP	PVC	BLACK

ELECTRICAL CHARACTERISTICS

IMPEDANCE		50 Ω
VOLTAGE RATING		250V(rms)
FREQUENCY RANGE		0 ~ 26.5 GHz
DIELECTRIC WITHSTANDING VOLTAGE		>750 V
CONTACT RESISTANCE	CENTER CONTACT	<3.0 mΩ
	OUTER CONTACT	<2.0 mΩ
INSULATION RESISTANCE		>5000 MΩ
INSERTION LOSS		<1.05+ 0.006X$\sqrt{F(GHz)}$
VSWR		<1.30
3RD INTERMODULATION		N/A

MECHANICAL CHARACTERISTICS

FORCE TO ENGAGE AND DISENGAGE	N/A
CENTER CONTACT RETENTION FORCE	>6 lbs
RECOMMENDED COUPLING TORQUE	7-10 in-lbs
COUPLING NUT RETENTION FORCE	N/A
DURABILITY	>500cycles

ENVIRONMENTAL PARAMETER

TEMPERATURE RANGE	-65 ℃~+150 ℃

* CUSTOMER OUTLINE DRAWING

UNLESS OTHERWISE SPECIFIED:
1) EDGES : C0.15 MAX ;
2) REMOVE ALL BURRS ;
3) SURFACE ROUGHNESS : Ra1.6 ;
4) UNITS : mm ;
5) DIMENSIONS TOLERANCES
DECIMALS : .x ±0.3 .xx ±0.2 .xxx±0.1;
ANGLES : ± 5°.

THIRD ANGLE PROJECTION

APPROVED :	CUSTOMER P/N : -
CHECKED :	SCALE : 1: 1
DRAWING :	DATE : 2020-06-20
	PAGE : 1/1

SLK SUPERLINK

TITLE : SMA FEMALE S/T FOR PCB MOUNTING, 2 HOLES FLANGE,50Ω

DRAWING NO. : 5MAF85S-H21-006

COMPANY WEBSITE : www.slkcorp.com