REV.	DESCRIPTION	ECN NO.	NAME	DATE
A1	RTMA009A/SS,RTMA011A/SS	N/A	SK	2015-10-27
A2	NEW FRAME	N/A	LEI CHAO	2020-08-12

RoHS

ALL PARTS MUST MEET TO RoHS REQUIREMENTS

REMARKS:
1.CONTACT PIN TO CAPTIVE
2.BODY TO SOLDER

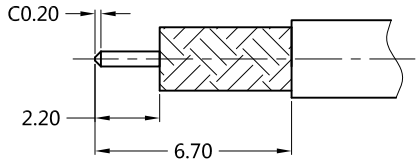

RECOMMENDED CABLE STRIPPING DIM'S

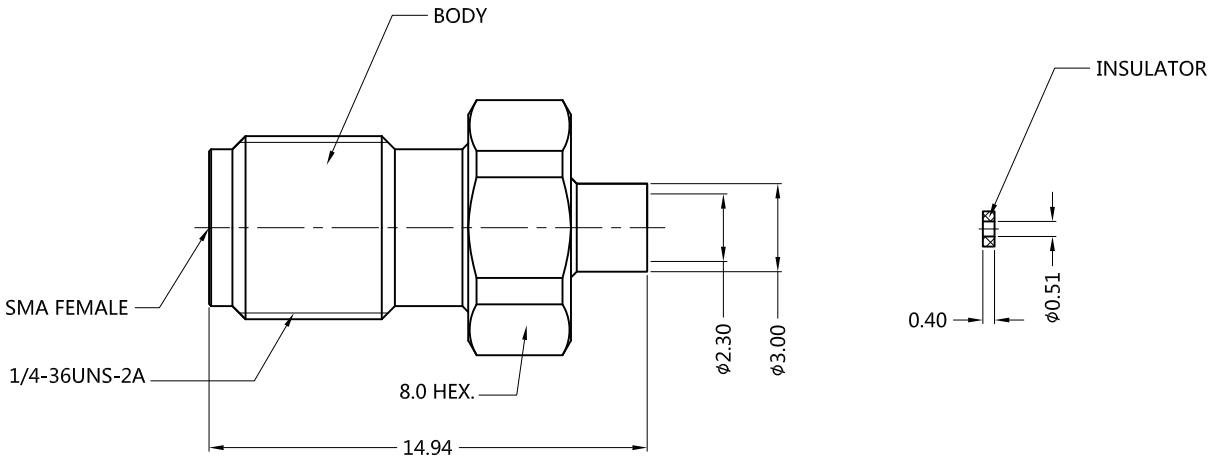

MATERIALS AND PLATING UNIT: MICRO-INCHES

PART NAME	MATERIALS	PLATING
BODY	BRASS C3604	GOLD 3 u"/NICKEL/COPPER
INSULATOR	TEFLON MIL-P-19468	N/A
CONTACT PIN	Be-Cu C17300	GOLD 10 u"/COPPER

ELECTRICAL CHARACTERISTICS

IMPEDANCE		50 Ω
VOLTAGE RATING		335 V(rms)
FREQUENCY RANGE		DC ~ 26.5 GHz
DIELECTRIC WITHSTANDING VOLTAGE		>1000 V
CONTACT RESISTANCE	CENTER CONTACT	<3.0 mΩ
	OUTER CONTACT	<2.0 mΩ
INSULATION RESISTANCE		>5000 MΩ
INSERTION LOSS		According to the cable
VSWR		<1.25@DC-18 GHZ <1.35@18-26.5 GHz

MECHANICAL CHARACTERISTICS

CABLE RETENTION FORCE	N/A
CENTER CONTACT RETENTION FORCE	>6 lbs
RECOMMENDED COUPLING TORQUE	N/A
COUPLING NUT RETENTION FORCE	N/A
DURABILITY	>500 cycles

ENVIRONMENTAL PARAMETER

TEMPERATURE RANGE	-55 ℃~+125 ℃
RELATIVE HUMIDITY	MIL-STD-202,Method 106
VIBRATION	MIL-STD-202,Method 204,Cond D
SHOCK	MIL-STD-202,Method 213,Cond I
CORROSION	MIL-STD-202,Method 101,Cond B

* CUSTOMER OUTLINE DRAWING

UNLESS OTHERWISE SPECIFIED:
1) EDGES : C0.15 MAX ;
2) REMOVE ALL BURRS ;
3) SURFACE ROUGHNESS : Ra1.6 ;
4) UNITS : mm ;
5) DIMENSIONS TOLERANCES
DECIMALS : .x ±0.3 .xx ±0.2 .xxx±0.1;
ANGLES : ± 5°.

THIRD ANGLE PROJECTION

APPROVED :	CUSTOMER P/N : -
CHECKED :	SCALE : -
DRAWING :	DATE : 2020-08-12
	PAGE : 1/1

SUPERLINK

TITLE : SMA FEMALE S/T SOLDER FOR TFLEX-405 CABLE, 50Ω

DRAWING NO. : 5MAF15S-A82-005

COMPANY WEBSITE : www.slkcorp.com